APEX DYNAMICS, INC.

PE/PG/PN/PB SERIES

Planetary Gearboxes

PE/PG/PN/PB Series

Characteristic Highlights

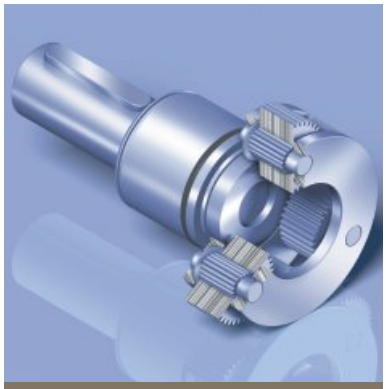

One piece planet carrier and planet gearing is supported on both sides. Provide maximum radial load capacity and increase system reliability and stiffness.

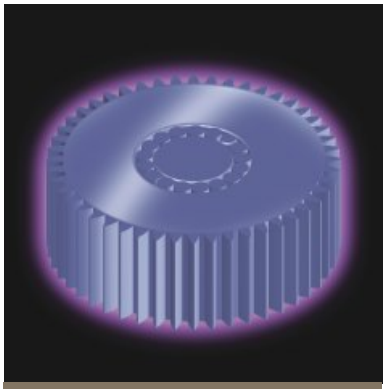

Equipped with ***solid uncaged needle roller bearings,*** provides maximum contact points to increase stiffness and generates high output torque.***Our in-house plasma nitriding*** heat treatment process maintains the tooth surface hardness at ***900Hv*** for superior wear-resistance and a core hardness at ***30 HRc*** for toughness.

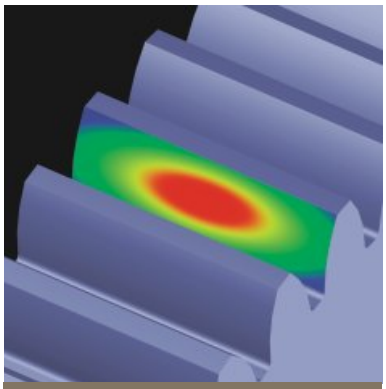

A high setting gear performance is achieved by using our ***HeliTopo technology.*** This ***eases off the tooth profile and crowns the lead of each tooth.*** This optimizes the gear mesh alignment and overlap to achieve maximum tooth sueface contact.

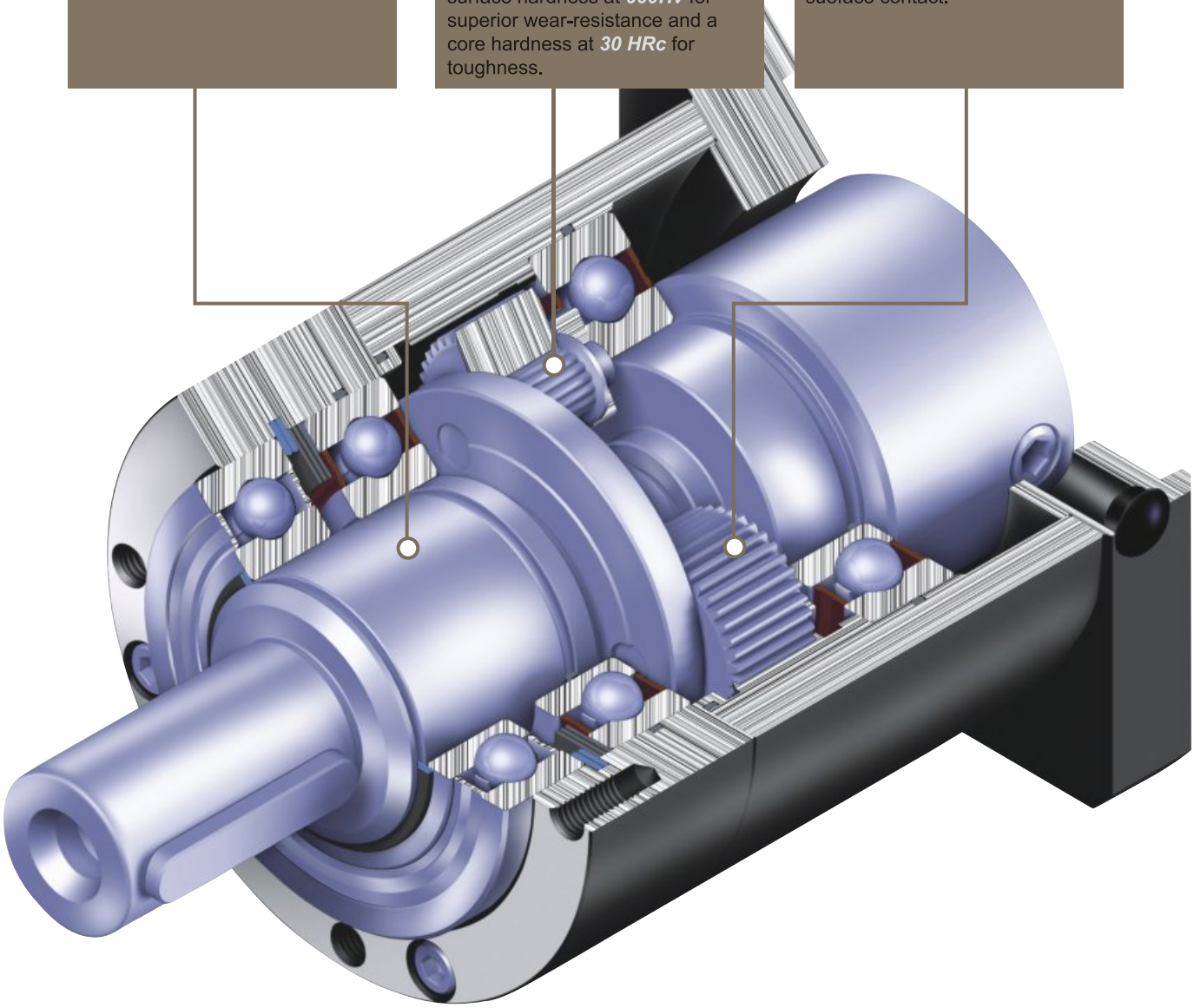

Permitted Radial and Axial Loads on Output Shaft of the Gearbox

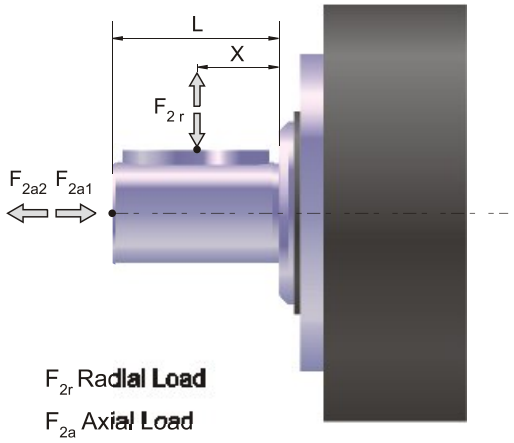

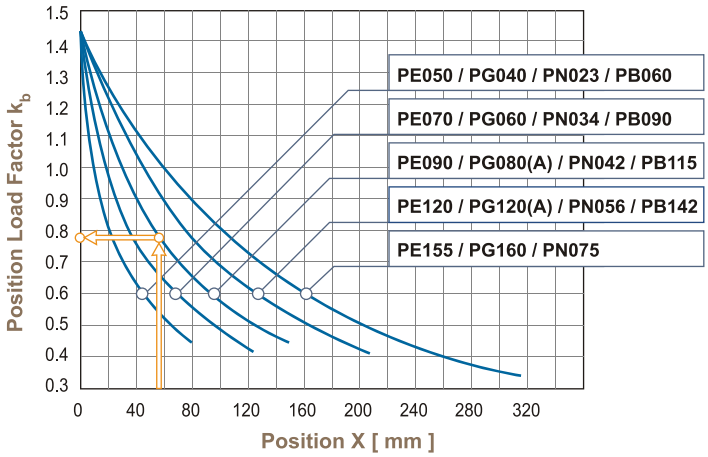

The permitted radial and axial loads on output shaft of the gearbox depend on the design of the gearbox supporting bearings.

If radial force F_{2r} is not exerted on the center of the output shaft X<1/2xL or X>1/2xL
The permitted radial and axial loads can be calculated by the position load factor K_b on the above diagram.

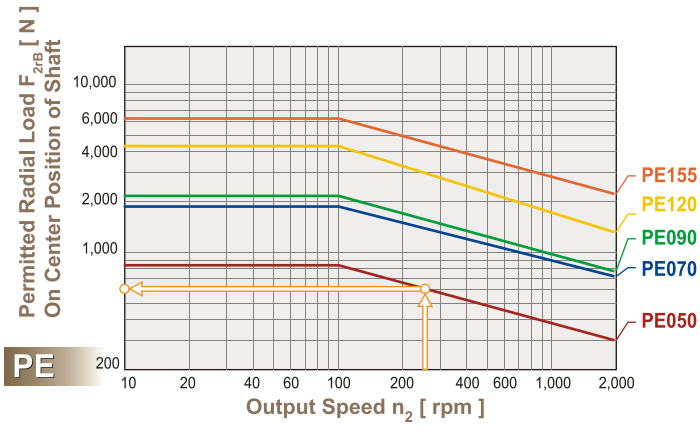

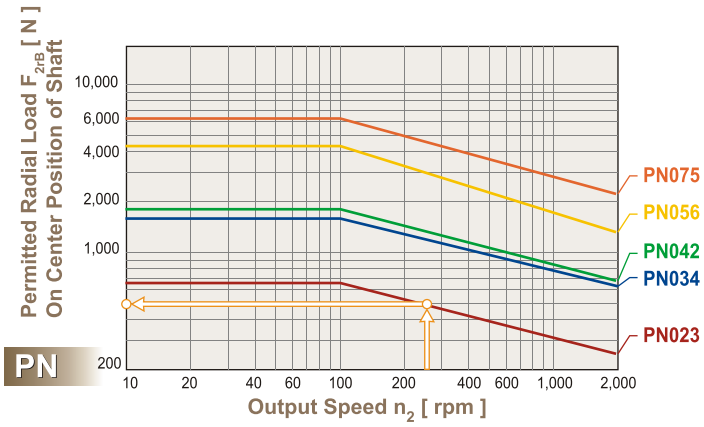

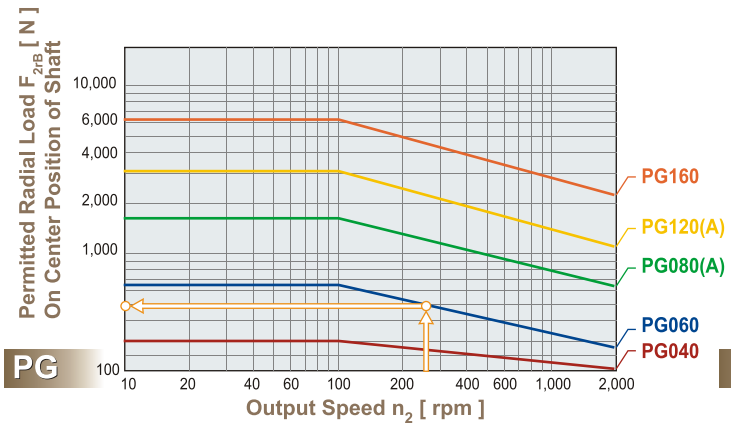

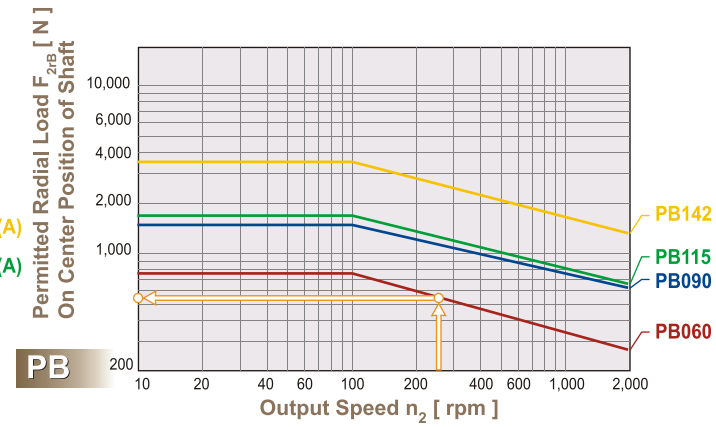

If radial force F_{2r} exert on the center of the output shaft X=1/2xL. Under various operating condition the lifetime is over 20,000* hours. The permitted radial load is given on the above diagram.

★ S1 service life 10,000 hrs (Consult us)

PE Series
Specifications

Gearbox Performance

Model No.		Stages	Ratio[1]	PE050	PE070	PE090	PE120	PE155
Nominal Output Torque T_{2N}	Nm	1	3	14	39	104	215	423
			4	12	31	85	176	364
			5	14	39	104	215	423
			7	12	33	91	195	358
			10	9	26	65	150	293
		2	15	14	39	104	215	423
			16	12	31	85	176	364
			20	12	31	85	176	364
			25	14	39	104	215	423
			30	14	39	104	215	423
			35	12	33	91	195	358
			40	12	31	85	176	364
			50	14	39	104	215	423
			70	12	33	91	195	358
			100	9	26	65	150	293
Emergency Stop Torque T_{2NOT}[2]	Nm	1,2	3~100	3 times of Nominal Output Torque				
Nominal Input Speed n_{1N}	rpm	1,2	3~100	4,500	4,000	3,600	3,000	2,500
Max. Input Speed n_{1B}	rpm	1,2	3~100	8,000	6,000	6,000	4,800	3,600
Backlash*	arcmin	1	3~10	≤ 8	≤ 8	≤ 6	≤ 6	≤ 6
		2	15~100	≤ 10	≤ 10	≤ 8	≤ 8	≤ 8
Torsional Rigidity	Nm/arcmin	1,2	3~100	2	4.4	13.5	35.6	64
Max. Radial Load F_{2rB}[3]	N	1,2	3~100	820	1,910	2,060	4,160	6,450
Max. Axial Load F_{2aB}[3]	N	1,2	3~100	410	955	1,030	2,080	3,225
Service Life	hr	1,2	3~100	20,000*				
Efficiency η	%	1	3~10	≥ 97%				
		2	15~100	≥ 94%				
Weight	kg	1	3~10	0.8	1.9	3.8	8.9	18.0
		2	15~100	1.1	2.7	5.2	12.2	24.6
Operating Temp	°C	1,2	3~100	-10°C~90°C				
Lubrication				Synthetic lubrication grease				
Degree of Gearbox Protection		1,2	3~100	IP64				
Mounting Position		1,2	3~100	all directions				
Noise Level (n_1=3000rpm, No Load)	dB(A)	1,2	3~100	≤ 68	≤ 70	≤ 72	≤ 74	≤ 75

Gearbox Inertia

Model No.		Stages	Ratio[1]	PE050	PE070	PE090	PE120	PE155
Mass Moments of Inertia J_1	kg.cm²	1	3	0.15	0.53	3.00	10.69	31.86
			4	0.15	0.51	2.83	10.08	29.82
			5	0.15	0.50	2.80	9.96	29.43
			7	0.15	0.50	2.79	9.91	29.26
			10	0.15	0.50	2.79	9.89	29.20
		2	15	0.15	0.50	2.80	9.96	29.43
			16	0.15	0.51	2.83	10.08	29.82
			20	0.15	0.50	2.80	9.96	29.43
			25	0.15	0.50	2.80	9.96	29.43
			30	0.15	0.50	2.80	9.96	29.43
			35	0.15	0.50	2.80	9.96	29.43
			40	0.15	0.50	2.79	9.89	29.20
			50	0.15	0.50	2.79	9.89	29.20
			70	0.15	0.50	2.79	9.89	29.20
			100	0.15	0.50	2.79	9.89	29.20

1. Ratio ($i=N_{in} / N_{out}$)
2. T_{2B} = 60% of T_{2NOT}
3. Applied to the output shaft center @ 100 rpm

*S1 service life 10,000 hrs (Consult us)

*Backlash is measured at 2% of Nominal Output Torque T_{2N}

PE Series Dimension

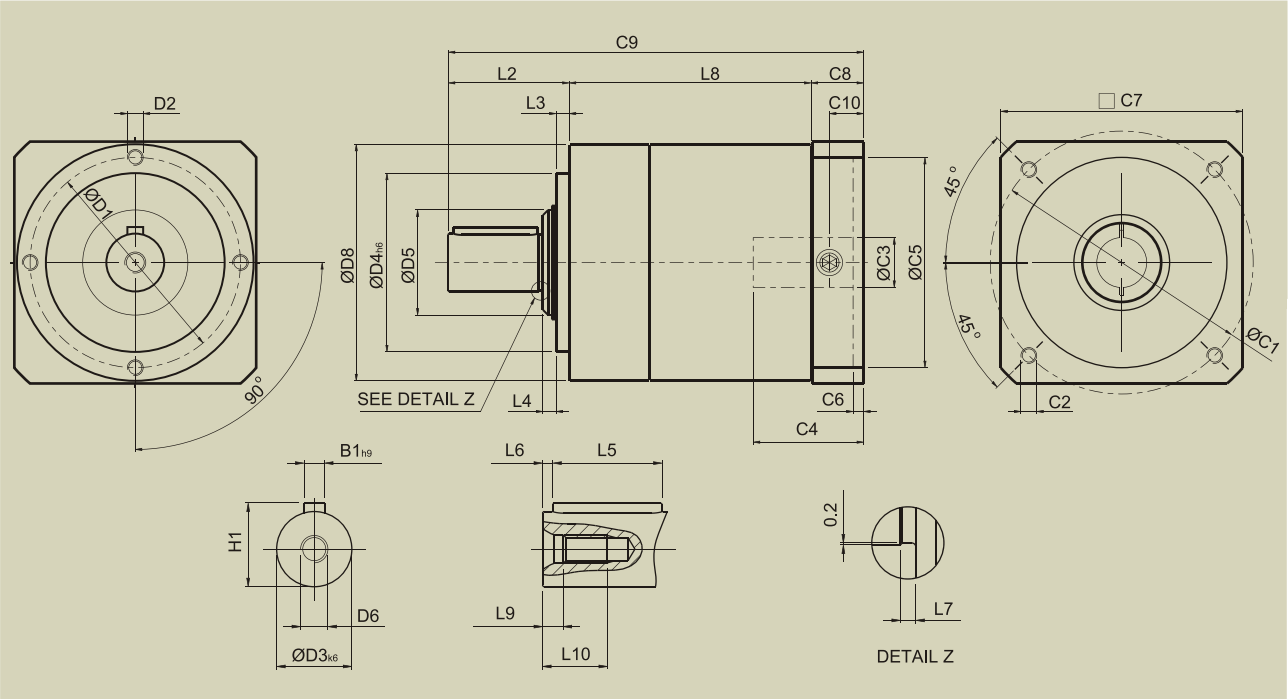

[unit: mm]

Dimension		PE050	PE070	PE090	PE120	PE155
D1		44	62	80	108	140
D2		M4X9	M5X10	M6X12	M8X15	M10X18
D3 k6		12	16	22	32	40
D4 h6		35	52	68	90	120
D5		17	25	40	50	65
D6		M4X0.7P	M5X0.8P	M8X1.25P	M12X1.75P	M16X2P
D8		50	70	90	120	155
L2		24.5	36	46	70	97
L3		4	5	5	6	8
L4		2.5	3	5	6	7
L5		14	25	32	50	70
L6		2	2	2	4	6
L7		1	1	1.5	2	2
L8	1-stage	55	77	92	127	145
	2-stage	79.5	110	131.5	180	205.5
L9		4.5	4.8	7.2	10	12
L10		10	12.5	19	28	36
C1[4]		46	70	100	130	165
C2[4]		M4X0.7P	M5X0.8P	M6X1P	M8X1.25P	M10X1.5P
C3[4]		≤12	≤ 16	≤ 24	≤ 32	≤ 38
C4[4]		30	34	40	50	60
C5[4]		30	50	80	110	130
C6[4]		3.5	8	4	5	6
C7[4]		52	72	92	122	157
C8[4]		21.5	21.5	20	24	31
C9[4]	1-stage	101	134.5	158	221	273
	2-stage	125.5	167.5	197.5	274	333.5
C10[4]		14.5	15.5	13	16	21
B1 h9		4	5	6	10	12
H1		13.5	18	24.5	35	43

4. C1~C10 are motor specific dimensions (metric std shown). Refer to Apexdyna.com and Design Tool to view your specific motor mounting system.

PG(PGA) Series
Specifications

Gearbox Performance

Model No.		Stages	Ratio[1]	PG040	PG060	PG080	PG080A	PG120	PG120A	PG160
Nominal Output Torque T_{2N}	Nm	1	3	14	39	104		215		423
			4	12	31	85		176		364
			5	14	39	104		215		423
			7	12	33	91		195		358
			10	9	26	65		150		293
		2	15	14	39	104		215		423
			16	12	31	85		176		364
			20	12	31	85		176		364
			25	14	39	104		215		423
			30	14	39	104		215		423
			35	12	33	91		195		358
			40	12	31	85		176		364
			50	14	39	104		215		423
			70	12	33	91		195		358
			100	9	26	65		150		293
Emergency Stop Torque T_{2NOT}[2]	Nm	1,2	3~100	3 times of Nominal Output Torque						
Nominal Input Speed n_{1N}	rpm	1,2	3~100	4500	4000	3600		3600		2500
Max. Input Speed n_{1B}	rpm	1,2	3~100	8000	6000	6000		4800		3600
Backlash*	arcmin	1	3~10	≤ 8	≤ 8	≤ 6		≤ 6		≤ 6
		2	15~100	≤ 10	≤ 10	≤ 8		≤ 8		≤ 8
Torsional Rigidity	Nm/arcmin	1,2	3~100	0.8	2.2	7.2		14.5		65.5
Max. Radial Load F_{2rB}[3]	N	1,2	3~100	300	680	1750		3080		6520
Max. Axial Load F_{2aB}[3]	N	1,2	3~100	150	340	875		1540		3260
Service Life	hr	1,2	3~100	20,000*						
Efficiency η	%	1	3~10	≥ 97%						
		2	15~100	≥ 94%						
Weight	kg	1	3~10	0.7	1.7	3.6	3.6	8.1	8.2	18.2
		2	15~100	1.0	2.4	5.0	5.0	11.3	11.4	24.9
Operating Temp	°C	1,2	3~100	-10°C~90°C						
Lubrication				Synthetic lubrication grease						
Degree of Gearbox Protection		1,2	3~100	IP64						
Mounting Position		1,2	3~100	all directions						
Noise Level (n_1=3000rpm, No Load)	dB(A)	1,2	3~100	≤ 68	≤ 70	≤ 72		≤ 74		≤ 75

Gearbox Inertia

Model No.		Stages	Ratio[1]	PG040	PG060	PG080	PG080A	PG120	PG120A	PG160
Mass Moments of Inertia J_1	kg.cm²	1	3	0.15	0.53	3.00		10.69		31.86
			4	0.15	0.51	2.83		10.08		29.82
			5	0.15	0.50	2.80		9.96		29.43
			7	0.15	0.50	2.79		9.91		29.26
			10	0.15	0.50	2.79		9.89		29.20
		2	15	0.15	0.50	2.80		9.96		29.43
			16	0.15	0.51	2.83		10.08		29.82
			20	0.15	0.50	2.80		9.96		29.43
			25	0.15	0.50	2.80		9.96		29.43
			30	0.15	0.50	2.80		9.96		29.43
			35	0.15	0.50	2.80		9.96		29.43
			40	0.15	0.50	2.79		9.89		29.20
			50	0.15	0.50	2.79		9.89		29.20
			70	0.15	0.50	2.79		9.89		29.20
			100	0.15	0.50	2.79		9.89		29.20

1. Ratio ($i=N_{in}/N_{out}$)
2. T_{2B} = 60% of T_{2NOT}
3. Applied to the output shaft center @ 100 rpm

*S1 service life 10,000 hrs (Consult us)

*Backlash is measured at 2% of Nominal Output Torque T_{2N}

PG(PGA) Series Dimension

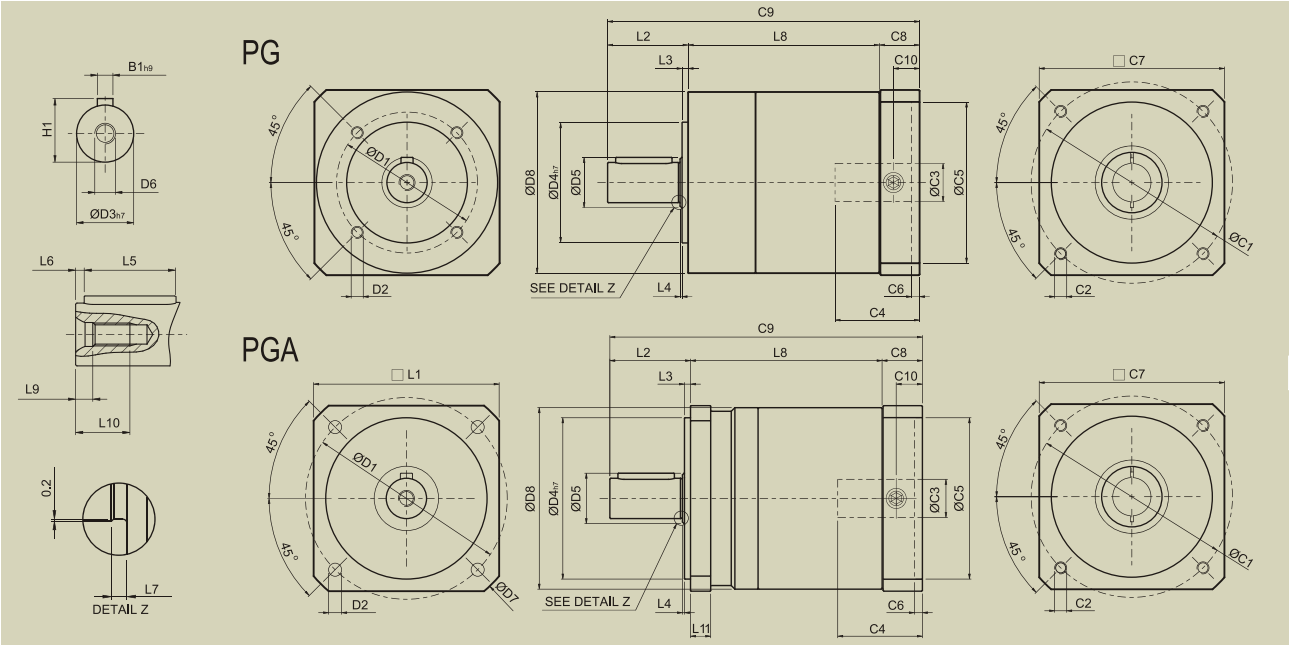

[unit: mm]

Dimension		PG040	PG060	PG080	PG080A	PG120	PG120A	PG160
D1		34	52	70	100	100	130	145
D2		M4X9	M5X10	M6X12	6.5	M10X18	8.5	M12X22
D3 h7		10	14	20		25		40
D4 h7		26	40	60	80	80	110	130
D5		12	17	25		35		65
D6		M3X0.5P	M5X0.8P	M6X1P		M10X1.5P		M16X2P
D7		-	-	-	120	-	167.5	-
D8		50	70	90		120		160
L1		-	-	-	92	-	124	-
L2		26	35	40		55		87
L3		2	3	3		4		5
L4		1	2	1		1		2
L5		18	25	28		40		65
L6		2.5	2.5	4		5		8
L7		1	1	1		1.5		2
L8	1-stage	50	68.5	95		125		153
	2-stage	74.5	101.5	134.5		178		213.5
L9		2.2	4.8	5		6.5		12
L10		9.5	12.5	16.5		23		36
L11		-	-	-	10	-	15	-
C1[4]		46	70	100		130		165
C2[4]		M4X0.7P	M5X0.8P	M6X1P		M8X1.25P		M10X1.5P
C3[4]		≤ 12	≤ 16	≤ 24		≤ 32		≤ 38
C4[4]		30	34	40		50		60
C5[4]		30	50	80		110		130
C6[4]		3.5	8	4		5		6
C7[4]		52	72	92		122		157
C8[4]		21.5	21.5	20		24		31
C9[4]	1-stage	97.5	125	155		204		271
	2-stage	122	158	194.5		257		331.5
C10[4]		14.5	15.5	13		16		21
B1 h9		3	5	6		8		12
H1		11.2	16	22.5		28		43

4. C1~C10 are motor specific dimensions (metric std shown). Refer to Apexdyna.com and Design Tool to view your specific motor mounting system.

PN Series
Specifications

Gearbox Performance

Model No.		Stages	Ratio[1]	PN023	PN034	PN042	PN056	PN075
Nominal Output Torque T_{2N}	Nm	1	3	14	39	104	215	423
			4	12	31	85	176	364
			5	14	39	104	215	423
			7	12	33	91	195	358
			10	9	26	65	150	293
		2	15	14	39	104	215	423
			16	12	31	85	176	364
			20	12	31	85	176	364
			25	14	39	104	215	423
			30	14	39	104	215	423
			35	12	33	91	195	358
			40	12	31	85	176	364
			50	14	39	104	215	423
			70	12	33	91	195	358
			100	9	26	65	150	293
Emergency Stop Torque T_{2NOT}[2]	Nm	1,2	3~100	3 times of Nominal Output Torque				
Nominal Input Speed n_{1N}	rpm	1,2	3~100	4,500	4,000	3,600	3,000	2,500
Max. Input Speed n_{1B}	rpm	1,2	3~100	8,000	6,000	6,000	4,800	3,600
Backlash*	arcmin	1	3~10	≤ 8	≤ 8	≤ 6	≤ 6	≤ 6
		2	15~100	≤ 10	≤ 10	≤ 8	≤ 8	≤ 8
Torsional Rigidity	Nm/arcmin	1,2	3~100	1.6	6.4	17.5	62.8	143.5
Max. Radial Load F_{2rB}[3]	N	1,2	3~100	680	1,770	1,830	4,140	6,440
Max. Axial Load F_{2aB}[3]	N	1,2	3~100	340	885	915	2,070	3,220
Service Life	hr	1,2	3~100	20,000*				
Efficiency η	%	1	3~10	≥ 97%				
		2	15~100	≥ 94%				
Weight	kg	1	3~10	0.8	2.3	4.6	9.7	19.7
		2	15~100	1.1	3.0	6.0	13.0	26.3
Operating Temp	°C	1,2	3~100	-10°C~90°C				
Lubrication				Synthetic lubrication grease				
Degree of Gearbox Protection		1,2	3~100	IP64				
Mounting Position		1,2	3~100	all directions				
Noise Level (n_1=3000rpm, No Load)	dB(A)	1,2	3~100	≤ 68	≤ 70	≤ 72	≤ 74	≤ 75

Gearbox Inertia

Model No.		Stages	Ratio[1]	PN023	PN034	PN042	PN056	PN075
Mass Moments of Inertia J_1	kg.cm²	1	3	0.15	0.53	3.00	10.69	31.86
			4	0.15	0.51	2.83	10.08	29.82
			5	0.15	0.50	2.80	9.96	29.43
			7	0.15	0.50	2.79	9.91	29.26
			10	0.15	0.50	2.79	9.89	29.20
		2	15	0.15	0.50	2.80	9.96	29.43
			16	0.15	0.51	2.83	10.08	29.82
			20	0.15	0.50	2.80	9.96	29.43
			25	0.15	0.50	2.80	9.96	29.43
			30	0.15	0.50	2.80	9.96	29.43
			35	0.15	0.50	2.80	9.96	29.43
			40	0.15	0.50	2.79	9.89	29.20
			50	0.15	0.50	2.79	9.89	29.20
			70	0.15	0.50	2.79	9.89	29.20
			100	0.15	0.50	2.79	9.89	29.20

1. Ratio ($i=N_{in}/N_{out}$)
2. T_{2B} = 60% of T_{2NOT}
3. Applied to the output shaft center @ 100 rpm

*S1 service life 10,000 hrs (Consult us)

*Backlash is measured at 2% of Nominal Output Torque T_{2N}

PN Series Dimension

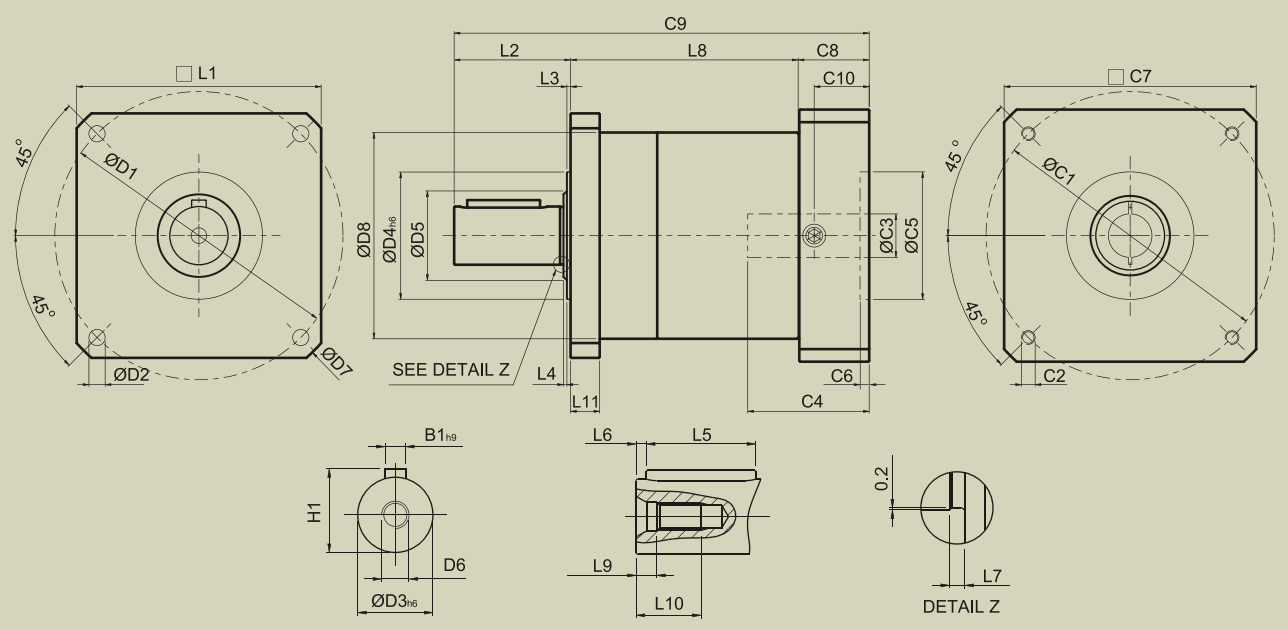

[unit: mm(inch)]

Dimension		PN023	PN034	PN042	PN056	PN075
D1		66.675(2.625)	98.425(3.875)	125.73(4.950)	177.8(7.0)	215.011(8.465)
D2		5.2(0.205)	5.6(0.220)	7.1(0.280)	10.4(0.409)	14.2(0.559)
D3 h6		12.7(0.5)	19.05(0.750)	25.4(1.0)	38.1(1.5)	50.8(2.0)
D4 h6		38.1(1.5)	73.025(2.875)	55.5(2.185)	114.3(4.5)	152.4(6.0)
D5		17	25	40	50	65
D6		M4X0.7P	M5X0.8P	M8X1.25P	M12X1.75P	M16X2P
D7		75	107.5	142	198	260
D8		50	70	90	120	155
L1		57.15(2.250)	82.55(3.250)	106.68(4.2)	146.05(5.750)	190(7.480)
L2		31.75	38.1	50.8	63.5	88.9
L3		1.6(0.063)	1.6(0.063)	1.6(0.063)	3.2(0.126)	4.75(0.187)
L4		1	1.5	1.5	2	2
L5		19.05(0.750)	25.4(1.0)	31.75(1.250)	38.1(1.5)	63.5(2.5)
L6		3.788(0.149)	3.8(0.150)	5.715(0.225)	8.563(0.337)	8.563(0.337)
L7		1	1	1.5	2	2
L8	1-stage	58.9	82	99.3	133.7	153.05
	2-stage	83.4	115	138.8	186.7	213.55
L9		4.5	4.8	7.2	10	12
L10		10	12.5	19	28	36
L11		6.4	7.9	12.7	19.05	22.2
C1[4]		66.675(2.625)	98.425(3.875)	125.73(4.950)	149.225(5.875)	165
C2[4]		M4X0.7P	M5X0.8P	M6X1P	11 Thru	M10X1.5P
C3[4]		≤12	≤16	≤24	≤32	≤38
C4[4]		32(1.260)	40(1.575)	51(2.008)	55(2.165)	60
C5[4]		38.15(1.502)	73.08(2.877)	55.65(2.191)	114.3(4.5)	130
C6[4]		3.5(0.138)	4(0.157)	4(0.157)	4(0.157)	6
C7[4]		55(2.165)	85(3.346)	110(4.331)	130(5.118)	157
C8[4]		23.5(0.925)	27.5(1.083)	31(1.220)	29(1.142)	31
C9[4]	1-stage	114.15(4.494)	147.6(5.811)	181.1(7.130)	226.2(8.905)	272.95
	2-stage	138.65(5.459)	180.6(7.110)	220.6(8.685)	279.2(10.992)	333.45
C10[4]		16.5(0.650)	21.5(0.846)	24(0.945)	21(0.827)	21
B1 h9		3.175(0.125)	4.763(0.188)	6.35(0.250)	9.525(0.375)	9.525(0.375)
H1		14.125(0.556)	21.163(0.833)	28.2(1.110)	42.275(1.664)	55.125(2.170)

4. C1~C10 are NEMA motor specific dimensions (except for PN075). Refer to Apexdyna.com and Design Tool to view your specific motor mounting system.

PB Series
Specifications

Gearbox Performance

Model No.		Stages	Ratio[1]	PB060	PB090	PB115	PB142
Nominal Output Torque T_{2N}	Nm	1	3	14	39	104	215
			4	12	31	85	176
			5	14	39	104	215
			7	12	33	91	195
			10	9	26	65	150
		2	15	14	39	104	215
			16	12	31	85	176
			20	12	31	85	176
			25	14	39	104	215
			30	14	39	104	215
			35	12	33	91	195
			40	12	31	85	176
			50	14	39	104	215
			70	12	33	91	195
			100	9	26	65	150
Emergency Stop Torque T_{2NOT}[2]	Nm	1,2	3~100	3 times of Nominal Output Torque			
Nominal Input Speed n_{1N}	rpm	1,2	3~100	4,500	4,000	3,600	3,000
Max. Input Speed n_{1B}	rpm	1,2	3~100	8,000	6,000	6,000	4,800
Backlash*	arcmin	1	3~10	≤ 8	≤ 8	≤ 6	≤ 6
		2	15~100	≤ 10	≤ 10	≤ 8	≤ 8
Torsional Rigidity	Nm/arcmin	1,2	3~100	3.7	7.2	15.1	60.5
Max. Radial Load F_{2rB}[3]	N	1,2	3~100	770	1,750	1,890	3,720
Max. Axial Load F_{2aB}[3]	N	1,2	3~100	385	875	945	1,860
Service Life	hr	1,2	3~100	20,000*			
Efficiency η	%	1	3~10	≥ 97%			
		2	15~100	≥ 94%			
Weight	kg	1	3~10	0.9	2.2	4.3	10.0
		2	15~100	1.2	3.0	5.7	13.3
Operating Temp	°C	1,2	3~100	-10°C~90°C			
Lubrication				Synthetic lubrication grease			
Degree of Gearbox Protection		1,2	3~100	IP64			
Mounting Position		1,2	3~100	all directions			
Noise Level (n_1=3000rpm, No Load)	dB(A)	1,2	3~100	≤ 68	≤ 70	≤ 72	≤ 74

Gearbox Inertia

Model No.		Stages	Ratio[1]	PB060	PB090	PB115	PB142
Mass Moments of Inertia J_1	kg.cm²	1	3	0.15	0.53	3.00	10.69
			4	0.15	0.51	2.83	10.08
			5	0.15	0.50	2.80	9.96
			7	0.15	0.50	2.79	9.91
			10	0.15	0.50	2.79	9.89
		2	15	0.15	0.50	2.80	9.96
			16	0.15	0.51	2.83	10.08
			20	0.15	0.50	2.80	9.96
			25	0.15	0.50	2.80	9.96
			30	0.15	0.50	2.80	9.96
			35	0.15	0.50	2.80	9.96
			40	0.15	0.50	2.79	9.89
			50	0.15	0.50	2.79	9.89
			70	0.15	0.50	2.79	9.89
			100	0.15	0.50	2.79	9.89

1. Ratio ($i=N_{in} / N_{out}$)
2. T_{2B} = 60% of T_{2NOT}
3. Applied to the output shaft center @ 100 rpm

*S1 service life 10,000 hrs (Consult us)

*Backlash is measured at 2% of Nominal Output Torque T_{2N}

PB Series Dimension

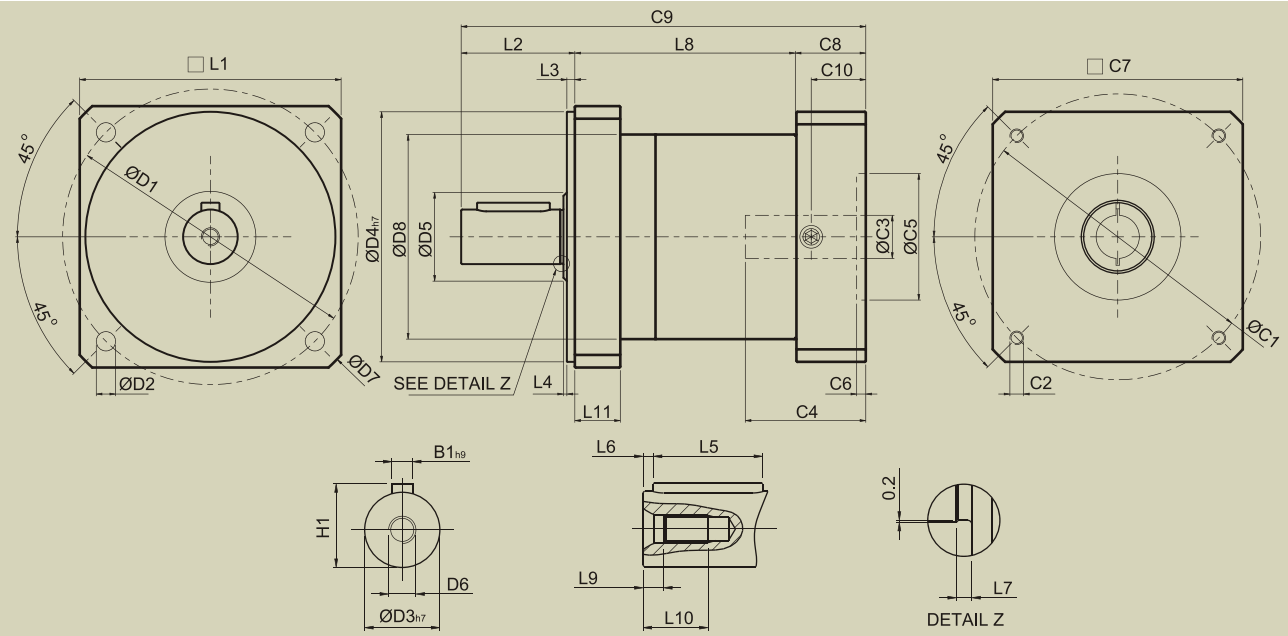

[unit: mm]

Dimension		PB060	PB090	PB115	PB142
D1		70	100	130	165
D2		5.5	6.5	9	11
D3 h7		16	20	24	40
D4 h7		50	80	110	130
D5		17	25	40	50
D6		M4X0.7P	M5X0.8P	M8X1.25P	M12X1.75P
D7		80	120	155	190
D8		50	70	90	120
L1		60	90	115	142
L2		25	40	50	80
L3		2.5	3	3.5	3.5
L4		1	1	1.5	1.5
L5		16	28	32	63
L6		3	5	7	8
L7		1	1	1.5	2
L8	1-stage	58	81	97	134
	2-stage	82.5	114	136.5	187
L9		4.5	4.8	7.2	10
L10		10	12.5	19	28
L11		13	17	20	25
C1[4]		46	70	100	130
C2[4]		M4X0.7P	M5X0.8P	M6X1P	M8X1.25P
C3[4]		≤ 12	≤ 16	≤ 24	≤ 32
C4[4]		30	34	40	50
C5[4]		30	50	80	110
C6[4]		3.5	8	4	5
C7[4]		52	72	92	122
C8[4]		21.5	21.5	20	24
C9[4]	1-stage	104.5	142.5	167	238
	2-stage	129	175.5	206.5	291
C10[4]		14.5	15.5	13	16
B1 h9		5	6	8	12
H1		18	22.5	27	43

4. C1~C10 are motor specific dimensions (metric std shown). Refer to Apexdyna.com and Design Tool to view your specific motor mounting system.

PE /PG/PN/PB SERIES

Ordering Code

PE090 — 010 / MOTOR

Gear Size:

PE: PE050, PE070, PE090, PE120, PE155

PG: PG040, PG060, PG080, PG080A, PG120, PG120A, PG160

PN: PN 023, PN034, PN042, PN056, PN075

PB: PB060, PB090, PB115, PB142

Ratio:

1 stage: 3, 4, 5, 7, 10

2 stage: 15, 16, 20, 25, 30, 35, 40, 50, 70, 100

Motor Designation:

Manufacture Type And Model

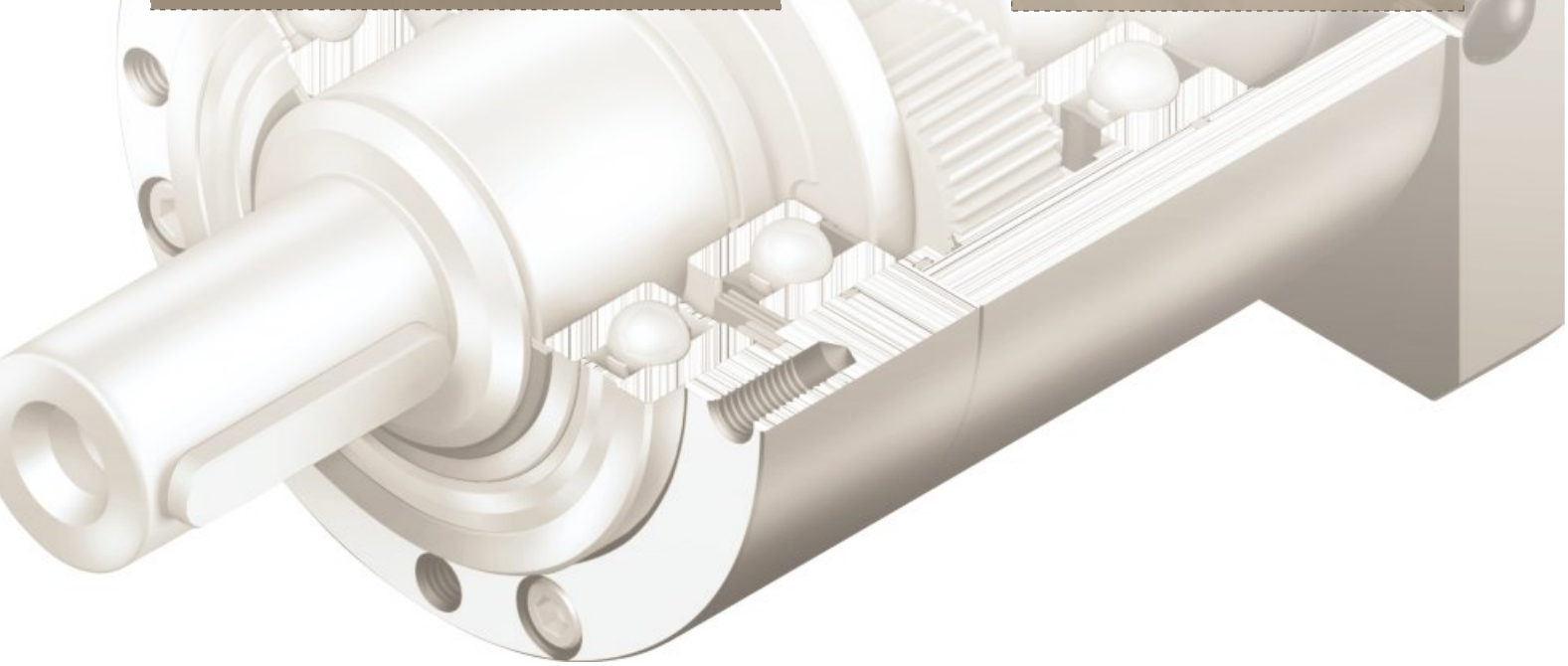

Ordering Example:PE090-010 / SIEMENS 1FT6 041-4AF71

APEX DYNAMICS, INC.

No.10, Keyuan 3rd Rd., Situn District, Taichung City 407, Taiwan (R.O.C.)

Tel: 886 4 23550219 / Fax: 886 4 23550218

E-mail: sales@apexdyna.com

Website: www.apexdyna.com